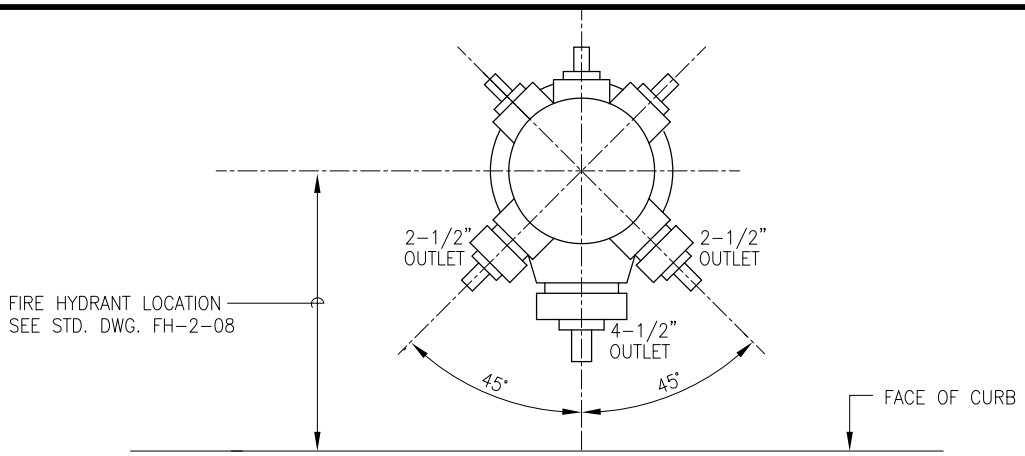

HYDRANT POSITION ON BURY

PLAN VIEW

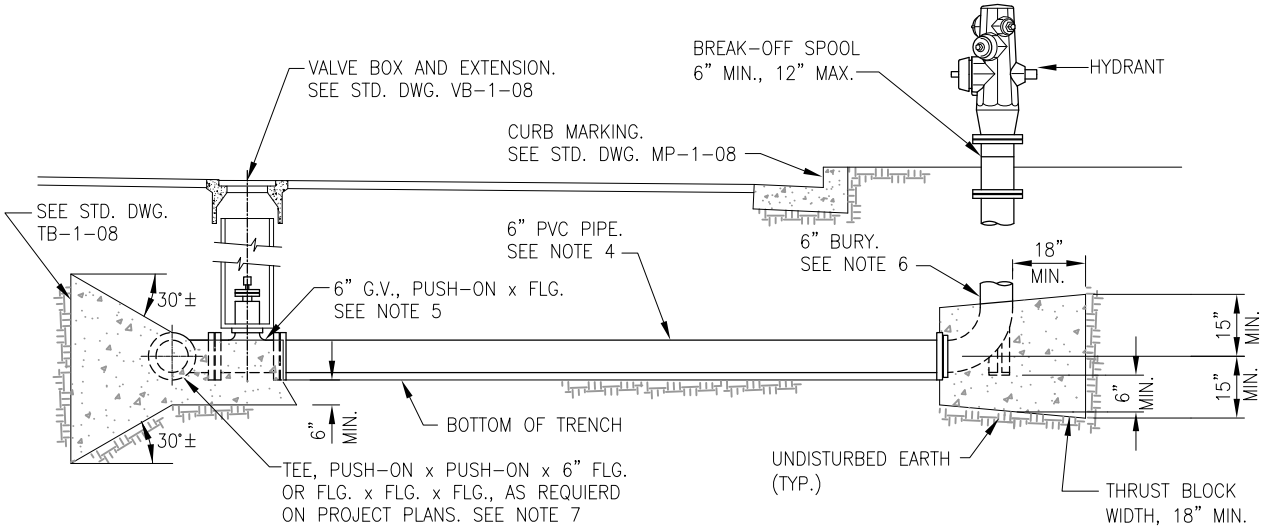

HYDRANT INSTALLATION

NTS

NOTES:

1. COAT ALL FERROUS METAL PRIOR TO PLACEMENT IN TRENCH IN ACCORDANCE WITH STANDARD SPECIFICATIONS.
2. FOR FIRE HYDRANT MANUFACTURER, TYPE AND PAINT COLOR, SEE APPROVED MATERIALS LIST.
3. CAST CONCRETE AGAINST UNDISTURBED EARTH.
4. LARGER PIPE DIAMETER AND/OR ALTERNATIVE LATERAL PIPE MATERIALS, SUCH AS SCHEDULE 40 STEEL, MAY BE REQUIRED BY THE DISTRICT.
5. GATE VALVES SHALL BE INSTALLED PER STANDARD DRAWING V-2-08. FOR STEEL HYDRANT LATERALS, USE FLANGED CONNECTION BETWEEN VALVE AND LATERAL.
6. FOR STEEL HYDRANT LATERALS, USE FLANGED OR WELDED CONNECTION BETWEEN LATERAL AND BURY IN ACCORDANCE WITH STANDARD SPECIFICATIONS.
7. FOR STEEL PIPE, USE WELDED TEE WITH FLANGED CONNECTION (THRUST BLOCK NOT REQUIRED FOR WELDED TEE ON STEEL MAINS).
8. FOR PVC HYDRANT LATERALS, INSTALL TRACER WIRE. SEE STANDARD DRAWING TW-1-08.

APPROVED ENGINEERING MANAGER — DATE 12/15/2008

ACWD
ALAMEDA COUNTY WATER DISTRICT
ALAMEDA COUNTY WATER DISTRICT
43885 SOUTH GRIMMER BOULEVARD
P.O. BOX 5110
FREMONT, CA 94537-5110
(510) 668-4200

STANDARD DRAWING

FIRE HYDRANTS

NO.	DATE	REVISION	BY	APP.
0	12-08	REPLACES STD. DWG. FH-1	RMF	LJA

DESIGNED	ACWD	DATE: DEC. 2008	
DRAWN	RMF	SCALE: NONE	
CHECKED	LJA	DWG. NO. FH-1-08	REV. 0
DIV. MGR.	EHS		