NOTES

1. INCISE STANDARD CURB MARKING FOR FIRE HYDRANT GATE VALVE ON FACE OF CURB DIRECTLY IN FRONT OF HYDRANT. SEE STANDARD DRAWING MP-1-08 FOR STANDARD CURB MARKINGS.
2. GROOVE IN BREAK-OFF SPOOL TO BE AT OR ABOVE FINISHED GRADE.
3. BOTTOM FLANGE OF BREAK-OFF SPOOL TO BE BELOW FINISHED GRADE.
4. SEE STANDARD DRAWING FH-1-08 FOR FIRE HYDRANT INSTALLATION DETAILS.
5. PROVIDE 2'-0" MINIMUM CLEARANCE TO SIDEWALK FOR MEANDERING SIDEWALK.

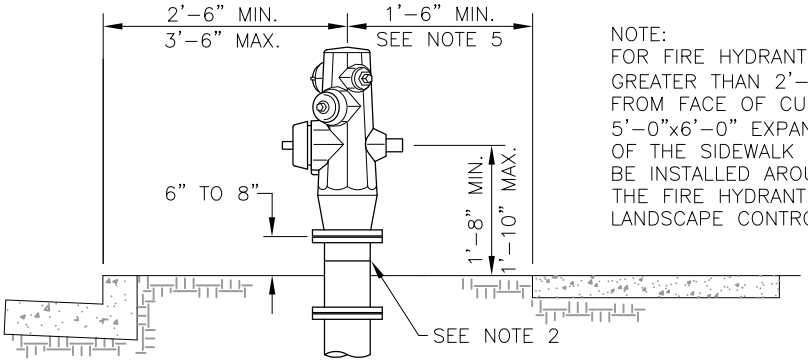

NOTE:
FOR FIRE HYDRANTS SET GREATER THAN 2'-6" FROM FACE OF CURB, A 5'-0"x6'-0" EXPANSION OF THE SIDEWALK SHALL BE INSTALLED AROUND THE FIRE HYDRANT FOR LANDSCAPE CONTROL.

INSTALLATION IN LANDSCAPE STRIP BETWEEN CURB AND SIDEWALK

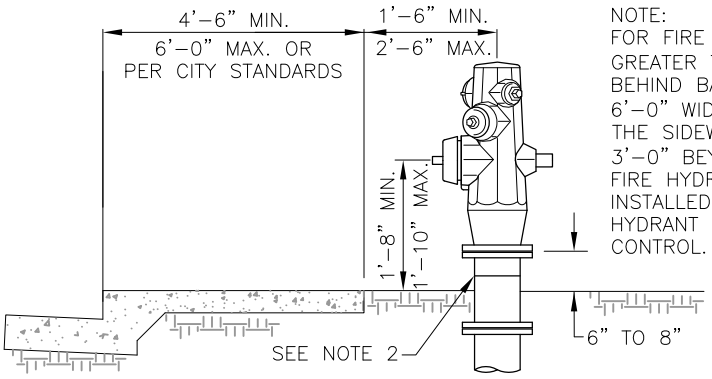

NOTE:
FOR FIRE HYDRANTS SET GREATER THAN 1'-6" BEHIND BACK OF WALK, A 6'-0" WIDE EXPANSION OF THE SIDEWALK EXTENDING 3'-0" BEYOND BACK OF FIRE HYDRANT SHALL BE INSTALLED AROUND FIRE HYDRANT FOR LANDSCAPE CONTROL.

INSTALLATION IN LANDSCAPE STRIP BEHIND CURB AND SIDEWALK

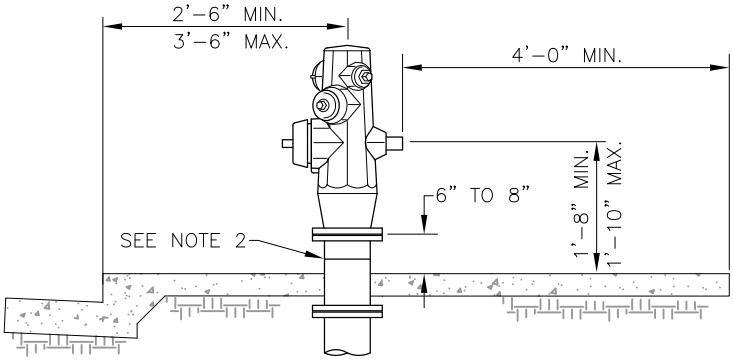

INSTALLATION IN FURNISHINGS ZONE FOR MONOLITHIC SIDEWALK

ACWD
ALAMEDA COUNTY WATER DISTRICT

ALAMEDA COUNTY WATER DISTRICT
43885 SOUTH GRIMMER BOULEVARD
P.O. BOX 5110
FREMONT, CA 94537-5110
(510) 668-4200

STANDARD DRAWING

FIRE HYDRANT LOCATIONS

APPROVED ENGINEERING MANAGER 12/15/2008 DATE

NO.	DATE	REVISION	BY	APP.
0	12-08	REPLACES STD. DWG. FH-2	RMF	LJA

DESIGNED	ACWD	DATE: DEC. 2008	
DRAWN	RMF	SCALE: NONE	
CHECKED	LJA	DWG. NO. FH-2-08	REV. 0
DIV. MGR.	EHS		