ITEM	DESCRIPTION
1	1" ANGLE METER STOP WITH LOCK WINGS AND FLARE TYPE VALVE INLET
2	1-1/4" SLIPxMIPT PVC ADAPTER
3	1-1/4" SCH. 40 PVC PIPE
4	1" STRAIGHT METER COUPLING WITH 1-1/4" FEMALE IRON PIPE THREADS
5	1-1/4"x16" SCH. 40 PVC WITH CAP
6	CHRISTY B16 METER BOX WITH B16G LID OR APPROVED EQUAL
7	2"x4"x36" REDWOOD OR PRESSURE-TREATED WOOD METER BOARDS (2)

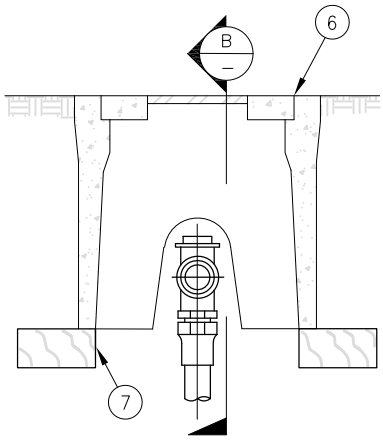

SECTION A
NTS

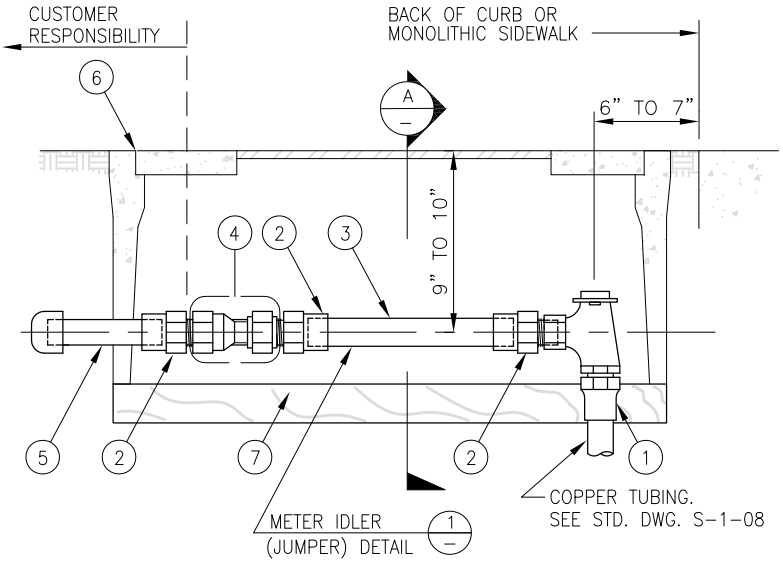

SECTION B
NTS

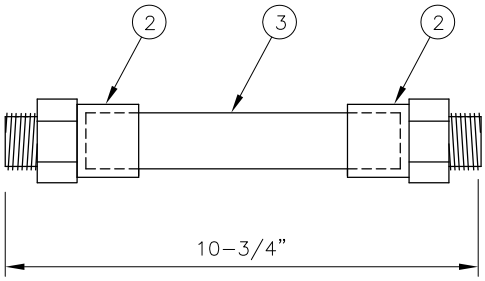

METER IDLER (JUMPER) DETAIL 1
NTS

NOTES:

1. SEE STANDARD DRAWINGS CL-4-08 AND CL-5-08 FOR METER AND SERVICE LINE LOCATION AND CLEARANCE REQUIREMENTS.
2. ALL ITEMS LISTED TO BE INSTALLED BY WATER MAIN CONTRACTOR.
3. ALL SERVICES SHALL HAVE "W" CURB MARKINGS. SEE STANDARD DRAWING MP-1-08.
4. ANY SEALS OR LOCKS PLACED ON A CLOSED ANGLE METER STOP OR CURB STOP SHALL NOT BE REMOVED EXCEPT BY ACWD.
5. METER BOX SHALL BE INSTALLED ON COMPACTED MATERIAL.
6. IDLER (JUMPER) SHALL BE INSTALLED WITH TWO METER WASHERS.
7. DISTRICT WILL SET 3/4" METERS WITH 3/4" AND 1" COUPLING ADAPTERS.
8. METER BOX SHALL BE LOCATED SUCH THAT CENTER OF READING LID OPENING IS DIRECTLY ABOVE CENTER OF METER IDLER.

ACWD
ALAMEDA COUNTY WATER DISTRICT

ALAMEDA COUNTY WATER DISTRICT
43885 SOUTH GRIMMER BOULEVARD
P.O. BOX 5110
FREMONT, CA 94537-5110
(510) 668-4200

STANDARD DRAWING

1" SERVICE LINE 3/4" AND 1" METERS WITHOUT FIRE SPRINKLER CONNECTIONS

APPROVED ENGINEERING MANAGER 12/15/2008 DATE

NO.	DATE	REVISION	BY	APP.
0	12-08	REPLACES STD. DWG. S-3	RMF	LJA

DESIGNED	ACWD	DATE: DEC. 2008	
DRAWN	RMF	SCALE: NONE	
CHECKED	LJA	DWG. NO. S-3-08	REV. 0
DIV. MGR.	EHS		