ITEM	DESCRIPTION
1	1" BRASS PLUG
2	1" CURB STOP WITH LOCK WINGS
3	1"x3" BRASS NIPPLE
4	1-1/2"x1" BRASS BUSHING
5	1-1/2" BRASS TEE
6	1-1/2" BRASS PLUG
7	1-1/2"x12" BRASS NIPPLE
8	1-1/2" BRASS METER FLANGE TAPPED 1-1/2" FIPT
9	1-1/2" PVC IDLER (JUMPER) WITH 1-1/2" PLASTIC OR BRASS METER FLANGES
10	1-1/2" ANGLE METER STOP WITH LOCK WINGS, COMPRESSION x FLANGE
11	1-1/2" POLYETHYLENE SERVICE LINE
12	2"x4"x36" REDWOOD OR PRESSURE-TREATED WOOD METER BOARDS (4)
13	CHRISTY N30BOX METER BOX WITH FL30G LID (OR APPROVED EQUAL)
14	CHRISTY B9 METER BOX WITH B9D LID (OR APPROVED EQUAL)
15	5/8"x2-1/4" BRASS BOLTS AND NUTS (THREAD END TOWARD CURB)

NOTES:

1. SEE STANDARD DRAWINGS CL-4-08 AND CL-5-08 FOR METER AND SERVICE LINE LOCATION AND CLEARANCE REQUIREMENTS.
2. ALL ITEMS LISTED TO BE INSTALLED BY WATER MAIN CONTRACTOR.
3. ALL SERVICES SHALL HAVE "W" CURB MARKINGS. SEE STANDARD DRAWING MP-1-08.
4. ANY SEALS OR LOCKS PLACED ON A CLOSED ANGLE METER STOP OR CURB STOP SHALL NOT BE REMOVED EXCEPT BY ACWD.
5. METER BOXES SHALL BE INSTALLED ON COMPACTED MATERIAL.
6. IDLER (JUMPER) SHALL BE INSTALLED WITH TWO METER FLANGE GASKETS.
7. METER BOX SHALL BE LOCATED SUCH THAT CENTER OF READING LID OPENING IS DIRECTLY ABOVE CENTER OF METER IDLER.

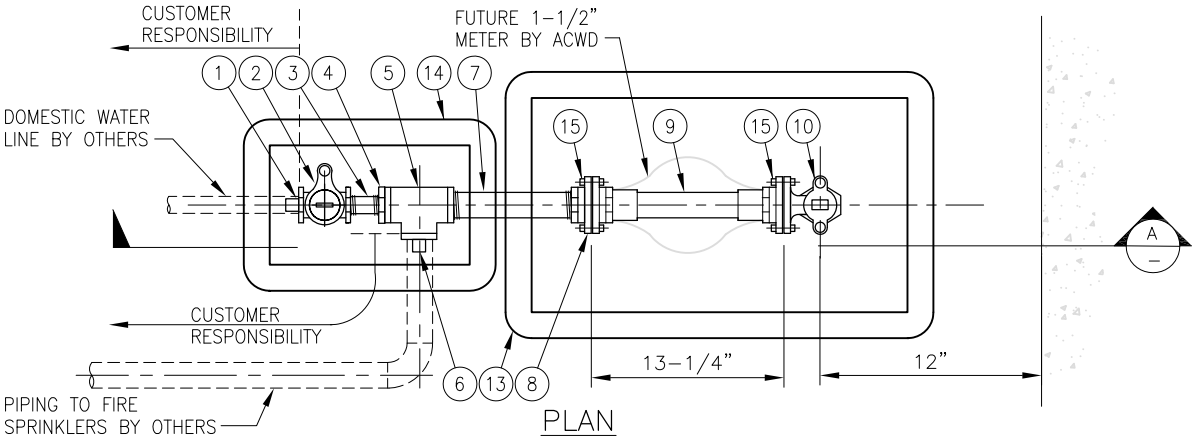

PLAN
NTS

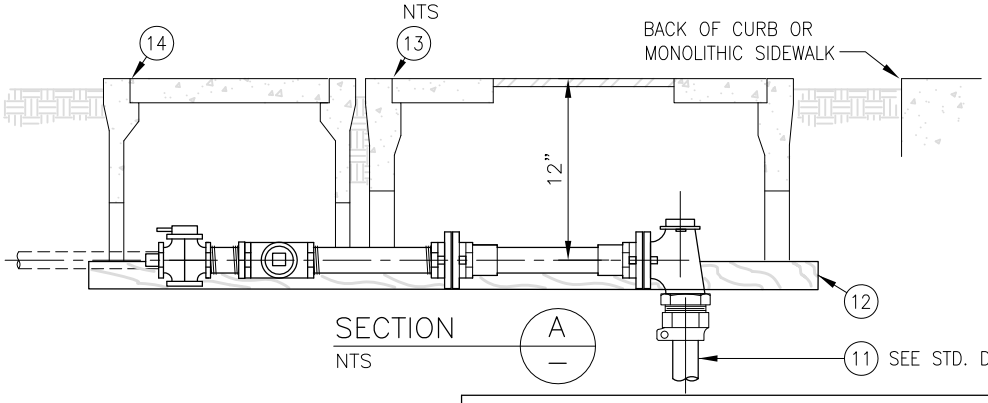

SECTION A
NTS

ACWD
ALAMEDA COUNTY WATER DISTRICT

ALAMEDA COUNTY WATER DISTRICT
43885 SOUTH GRIMMER BOULEVARD
P.O. BOX 5110
FREMONT, CA 94537-5110
(510) 668-4200

STANDARD DRAWING

1-1/2" SERVICE LINE AND METER IN DUAL METER BOX FOR RESIDENCES WITH FIRE SPRINKLERS

APPROVED ENGINEERING MANAGER 12/15/2008 DATE

NO.	DATE	REVISION	BY	APP.
0	12-08	REPLACES STD. DWG. S-4	RMF	LJA

DESIGNED	ACWD	DATE: DEC. 2008	
DRAWN	RMF	SCALE: NONE	
CHECKED	LJA	DWG. NO. S-4-08	REV. 0
DIV. MGR.	EHS		