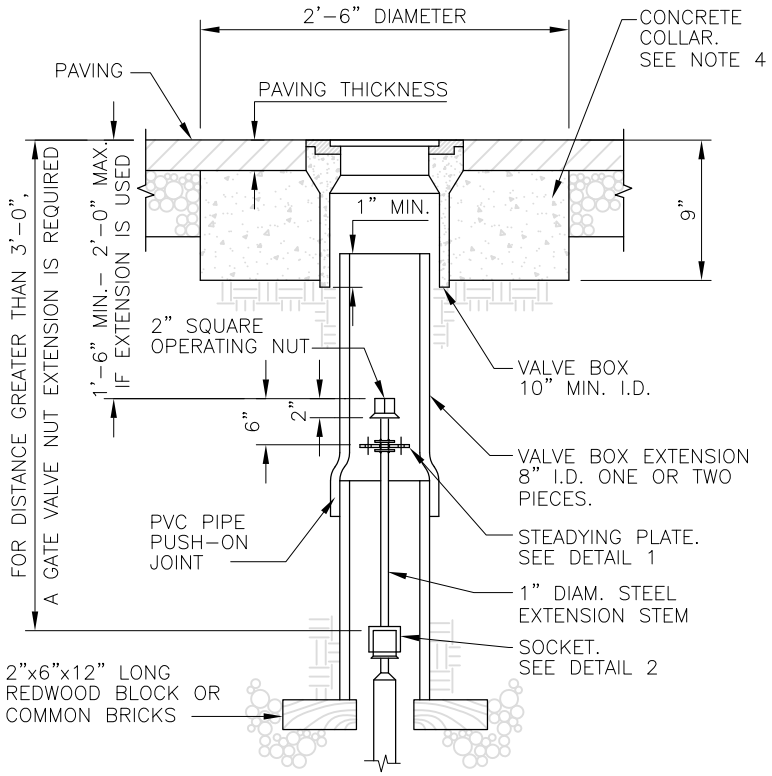


VALVE BOX

NTS

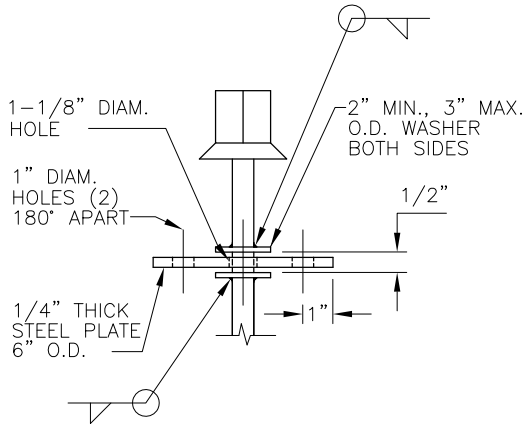


STEADYING PLATE DETAIL 1/—

NTS

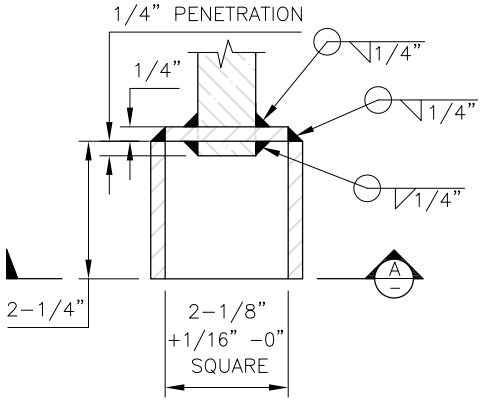


SOCKET DETAIL 2/—

NTS

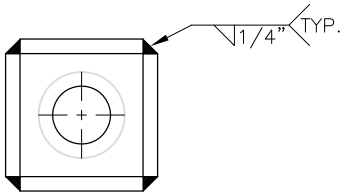


SECTION A/—

NTS

NOTES:

1. CONCRETE SHALL BE 6 SACK 3/4" MAXIMUM AGGREGATE SIZE.
2. AFTER PAVING, RAISE VALVE BOX TO PERMANENT GRADE, CAST CONCRETE COLLAR AND REPAIR PAVEMENT.
3. AFTER FABRICATION OF VALVE STEM EXTENSION ASSEMBLY COAT ENTIRE ASSEMBLY WITH TWO COATS OF RUST-OLEUM PRIMER OR APPROVED EQUAL.
4. IN UNPAVED AREAS, CONCRETE COLLAR TO BE INSTALLED FLUSH WITH VALVE BOX LID. THE SURFACE OF THE CONCRETE COLLAR SHALL SLOPE AWAY FROM THE VALVE BOX LID WITH 2% SLOPE ON FINISHED CONCRETE SURFACE. GRADE OF VALVE BOX LID TO BE DETERMINED BY DISTRICT.
5. ANY TRACER WIRES PRESENT SHALL BE INSTALLED IN THE VALVE BOX IN ACCORDANCE WITH STANDARD DRAWING TW-1-08.
6. FOR DESIGNATION ON CURB OR MARKER POST, SEE STANDARD DRAWING MP-1-08.

APPROVED 12/15/2008

ENGINEERING MANAGER DATE

ACWD
ALAMEDA COUNTY WATER DISTRICT
ALAMEDA COUNTY WATER DISTRICT
43885 SOUTH GRIMMER BOULEVARD
P.O. BOX 5110
FREMONT, CA 94537-5110
(510) 668-4200

STANDARD DRAWING

VALVE BOX

| NO. | DATE | REVISION | BY | APP. |
|---|---|---|---|---|
| | | | | |
| | | | | |
| 0 | 12-08 | REPLACES STD. DWG. VB-1 | RMF | LJA |

| | | | |
|---|---|---|---|
| DESIGNED | ACWD | DATE: DEC. 2008 | |
| DRAWN | RMF | SCALE: NONE | |
| CHECKED | LJA | DWG. NO. VB-1-08 | REV. 0 |
| DIV. MGR. | EHS | | |