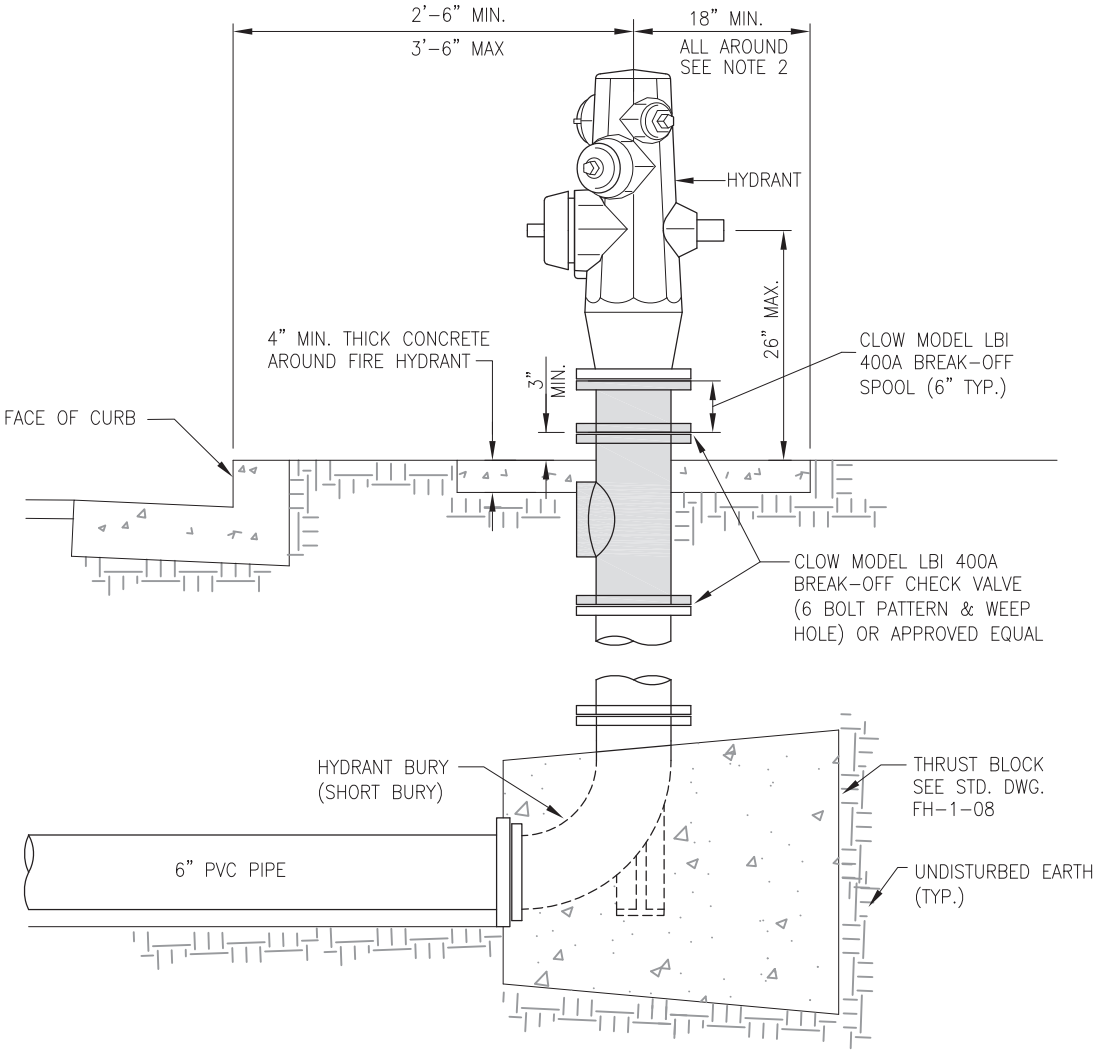

FIRE HYDRANT BREAK-OFF CHECK VALVE INSTALLATION

NTS

NOTES:

1. BREAK-OFF CHECK VALVE SHALL BE CLOW MODEL LBI 400A OR APPROVED EQUAL.
2. FOR NON-MONOLITHIC CURB, USE 36" X 36" SQUARE, 4" THICK CONCRETE COLLAR AROUND BREAK-OFF CHECK VALVE ASSEMBLY.
3. FOR MONOLITHIC CURB, PROVIDE 48" OF CLEARANCE BEHIND OR IN FRONT OF THE FIRE HYDRANT. SEE STANDARD DETAIL FH-2-08.
4. FOR ALL OTHER FIRE HYDRANT SPECIFICATIONS, SEE STANDARD DETAIL FH-01-08 AND FH-02-08.

ACWD
ALAMEDA COUNTY WATER DISTRICT

ALAMEDA COUNTY WATER DISTRICT
43885 SOUTH GRIMMER BOULEVARD
P.O. BOX 5110
FREMONT, CA 94537-5110
(510) 668-4200

STANDARD DRAWING

APPROVED _____ 02/26/26
DIRECTOR OF ENGINEERING AND TECHNOLOGY — DATE

FIRE HYDRANT WITH BREAK-OFF CHECK VALVE

NO.	DATE	REVISION	BY	APP.
0	02-26	NEW STANDARD DRAWING	NA	SRO

DESIGNED	ACWD	DATE: FEB 2026	
DRAWN	NA	SCALE: NONE	
CHECKED	SRO	DWG. NO. FH-3-26	REV. 0
DIV. MGR.	SRO		